Model			1.GWH09YD-S6DBA2A 2.GWH09YD-S6DBA1A 3.GWH09YD-S6DBA2A	
Product Code			1.(CB466000109/CB466000112 CB466000116/CB466000115) 2.CB437002902	
Power Supply	Rated Voltage	V~	220-240	
	Rated Frequency	Hz	50/60	
	Phases		1	
Power Supply Mode			Outdoor	
Cooling Capacity		W	2700	
Heating Capacity		W	3500	
Cooling Power Input		W	550	
Heating Power Input		W	745	
Cooling Power Current		A	3.52	
Heating Power Current		A	4.63	
Rated Input		W	2400	
Rated Current		A	10.65	
Air Flow Volume(SH/H/MH/M/ML/L/SL)		m^3/h	800/720/570/620/560/500/450	
Dehumidifying Volume		L/h	0.8	
EER		W/W	4.91	
COP		W/W	4.70	
SEER			8.50	
HSPF			/	
SCOP			5.10	
Application Area		m^2	12-18	
	Fan Type		Cross-flow	
	Diameter Length(DXL)	mm	Φ106X706	
	Fan Motor Cooling Speed (SH/H/MH/M/ML/L/SL/SSL)	r/min	1200/1100/1030/960/820/650/600/500	
	Fan Motor Heating Speed (SH/H/MH/M/ML/L/SL)	r/min	1300/1200/1120/1040/880/700/650/-	
	Output of Fan Motor	W	60	
	Fan Motor RLA	A	0.09	
	Fan Motor Capacitor	μF	/	
	Input of Heater	W	/	
	Evaporator Form		Aluminum Fin-copper Tube	
	Pipe Diameter	mm	Φ7	
	Row-fin Gap	mm	2-1.4	
	Coil Length (LXDXW)	mm	715X25.4X304.8	
	Swing Motor Model		MP35CJ/MP24HF	
	Output of Swing Motor	W	2.5/1.5	
	Fuse	A	3.15	
	Sound Pressure Level (SH/H/MH/M/ML/L/SL) Cooling mode	dB (A)	Cooling:43/41/38/36/33/31/29 Heating:46/44/42/39/37/34/31	
	Sound Power Level (SH/H/MH/M/ML/L/SL) Cooling mode	dB (A)	Cooling:58/51/48/46/43/41/39 Heating:56/54/52/49/47/44/41	
	Dimension (WXHXD)	mm	996X301X225	
	Dimension of Carton Box (LXWXH)	mm	1057X377X307	
	Dimension of Package (LXWXH)	mm	1060X380X322	
	Net Weight	kg	13	
	Gross Weight	kg	16	

Outdoor Unit	Model of Outdoor Unit		GWH09YD-S6DBA2A/O	
	Outdoor Unit Product Code		CB466W00109	
	Compressor Manufacturer/Trademark		ZHUHAI LANDA COMPRESSOR CO., LTD	
	Compressor Model		QXFT-B123zE170A	
	Compressor Oil		FW68DA	
	Compressor Type		Rotary	
	L.R.A.	A	20	
	Compressor RLA	A	7.9	
	Compressor Power Input	W	1230	
	Overload Protector		/	
	Throttling Method		Electron expansion valve	
	Operation Temp	°C	16~30	
	Ambient Temp (Cooling)	°C	-18~54	
	Ambient Temp (Heating)	°C	-30~24	
	Condenser Form		Aluminum Fin-copper Tube	
	Pipe Diameter	mm	Φ7	
	Rows-fin Gap	mm	2.5-1.4	
	Coil Length (LXDXW)	mm	763X57X550	
	Fan Motor Speed	rpm	900	
	Output of Fan Motor	W	30	
	Fan Motor RLA	A	0.24	
	Fan Motor Capacitor	μF	/	
	Air Flow Volume of Outdoor Unit	m^3/h	2400	
	Fan Type		Axial-flow	
	Fan Diameter	mm	Φ438	
	Defrosting Method		Automatic Defrosting	
	Climate Type		T1	
	Isolation		I	
	Moisture Protection		IPX4	
	Permissible Excessive Operating Pressure for the Discharge Side	MPa	4.3	
	Permissible Excessive Operating Pressure for the Suction Side	MPa	2.5	
	Sound Pressure Level (H/M/L)	dB (A)	53/-/-	
	Sound Power Level (H/M/L)	dB (A)	62/-/-	
	Dimension (WXHXD)	mm	899X596X378	
	Dimension of Carton Box (LXWXH)	mm	945X417X630	
	Dimension of Package (LXWXH)	mm	948X420X645	
	Net Weight	kg	44.5	
	Gross Weight	kg	47.5	
	Refrigerant		R32	
	Refrigerant Charge	kg	1	
Connection Pipe	Length	m	5	
	Gas Additional Charge	g/m	16	
	Outer Diameter Liquid Pipe	mm	Φ6	
	Outer Diameter Gas Pipe	mm	Φ9.52	
	Max Distance Height	m	10	
	Max Distance Length	m	15	
	Note: The connection pipe applies metric diameter.			

The above data is subject to change without notice; please refer to the nameplate of the unit.

2.2 Operation Characteristic Curve

Cooling

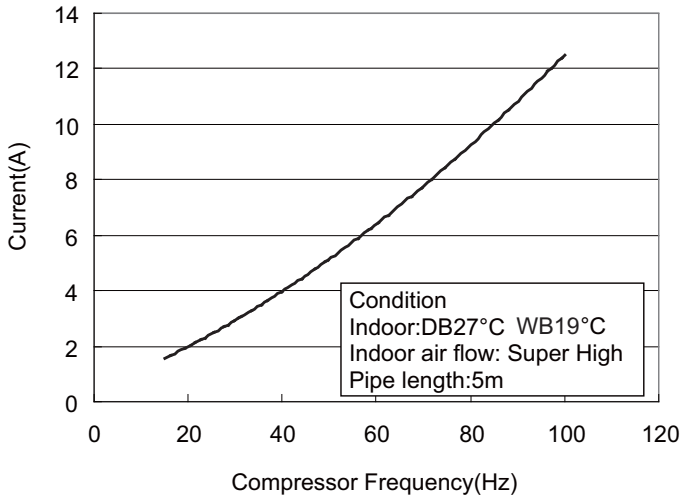

Heating

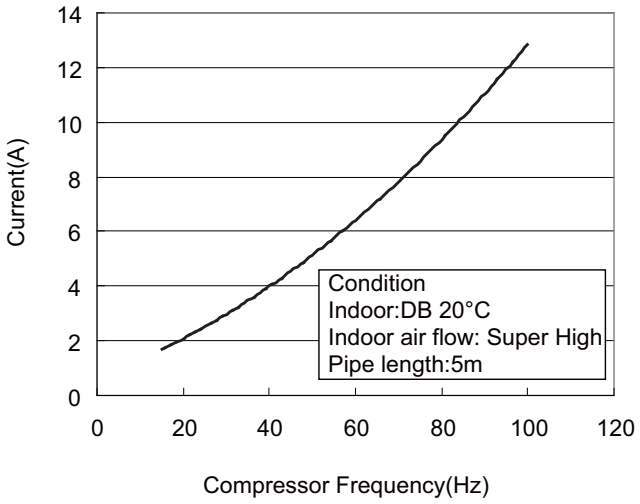

2.3 Capacity Variation Ratio According to Temperature

09K

Cooling

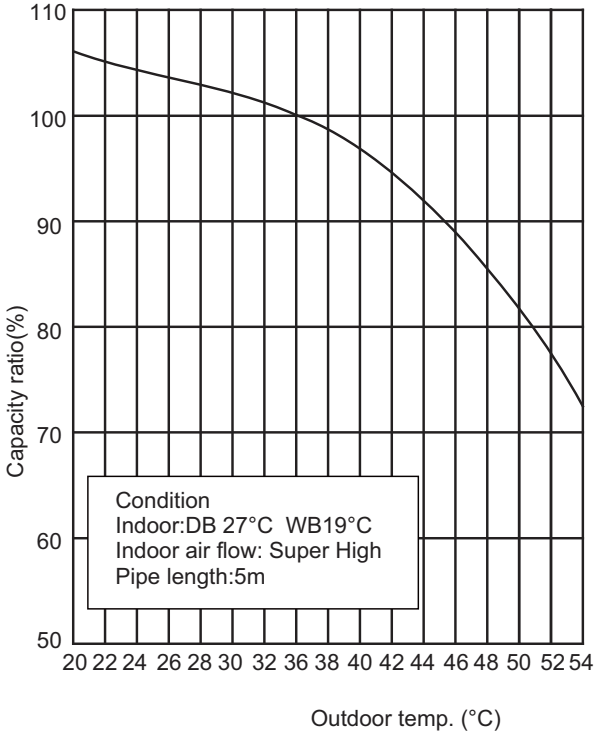

Heating

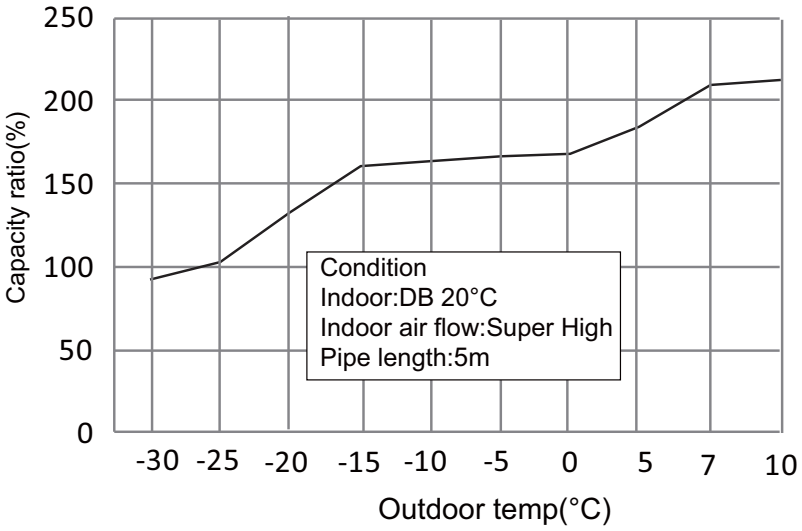

3. Outline Dimension Diagram

3.1 Indoor Unit

09/12K

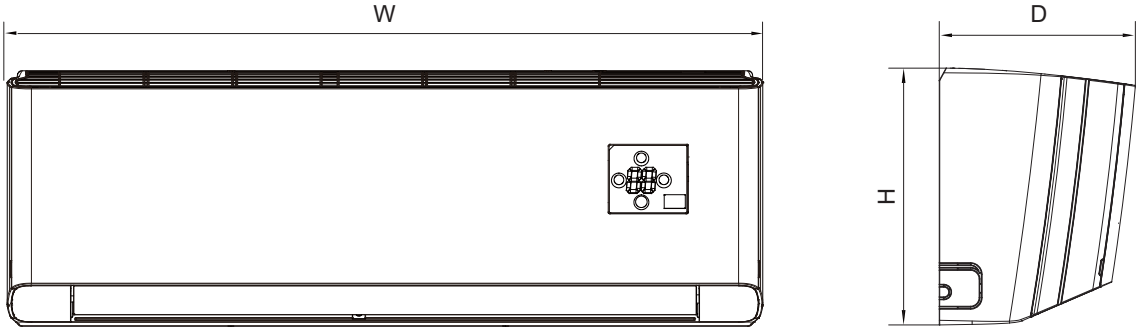

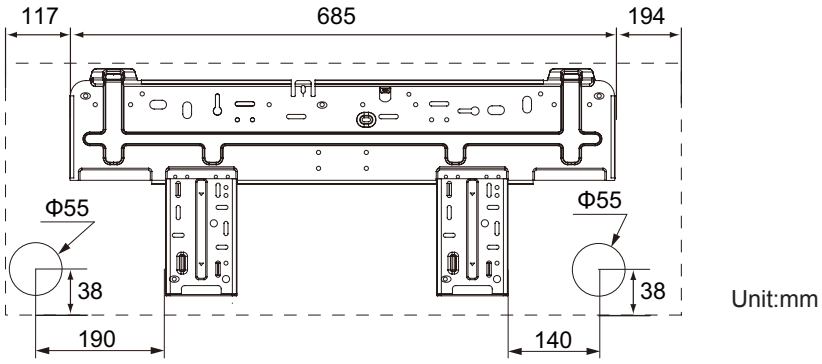

Unit:mm

Model	W	H	D
09K/12K	996	301	225

3.2 Outdoor Unit

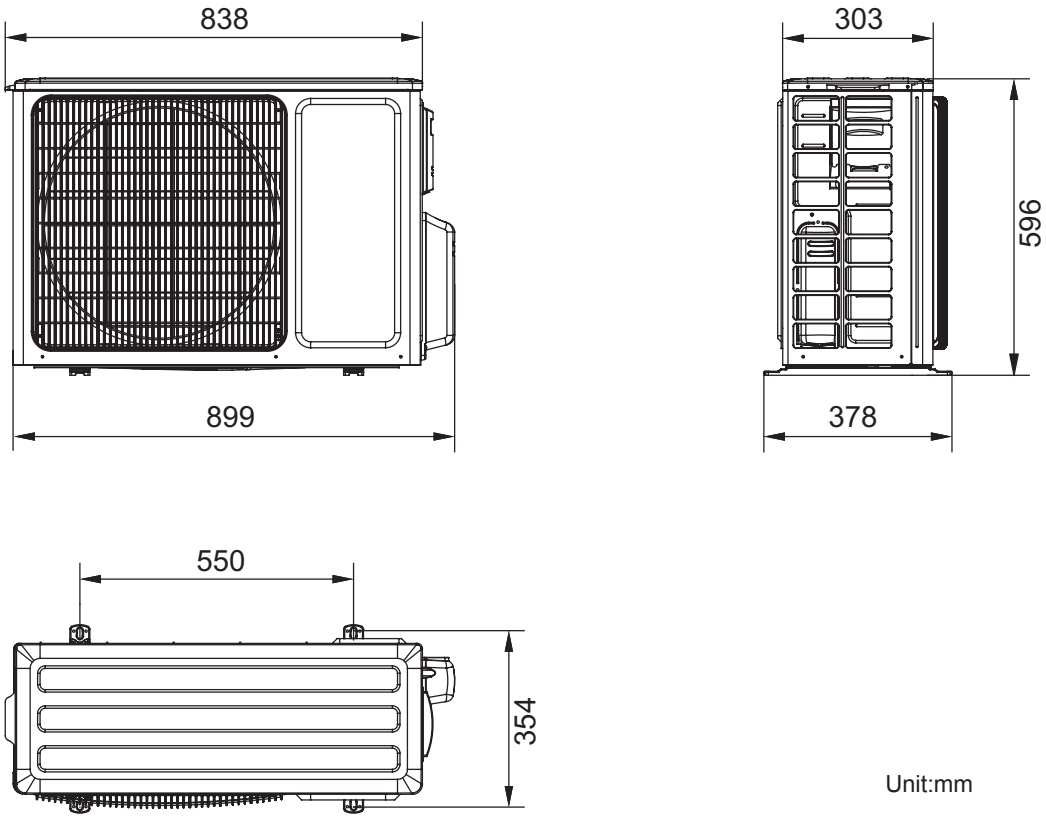

Unit:mm